DESIGN + ENGINEERING
GROHE GERMANY

96.179.131/ÄM 233566/06.15

www.grohe.com

Pure Freude an Wasser

GROHE

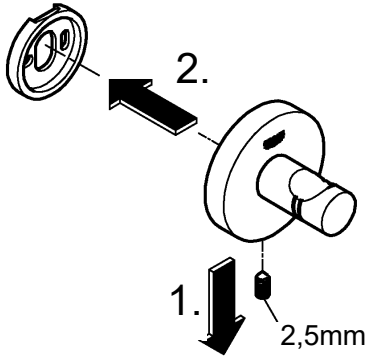

1.

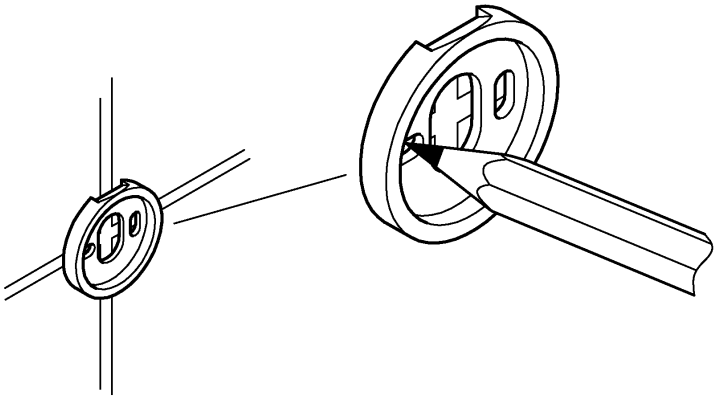

2.

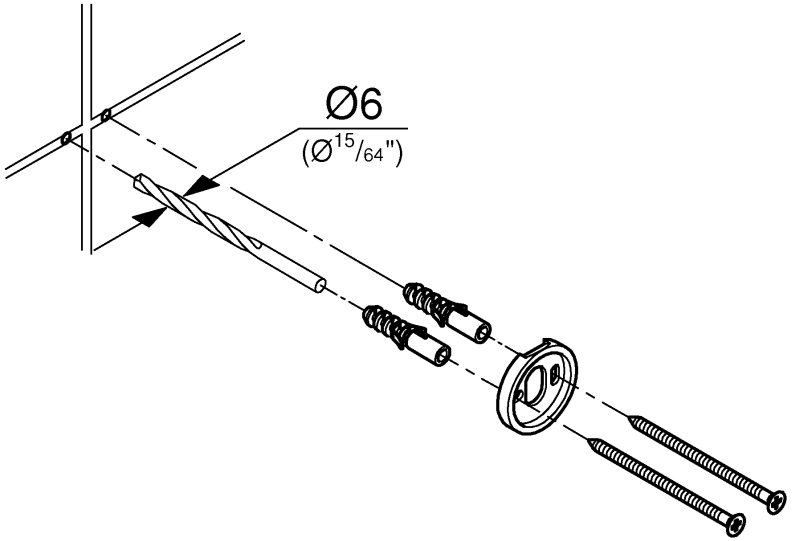

3.

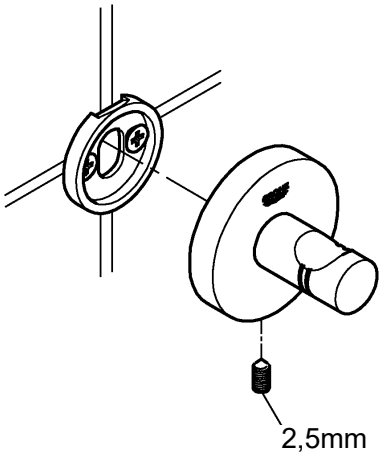

4.

TM.by ONLINE STORE
https://tm.by
Интернет-магазин TM.by

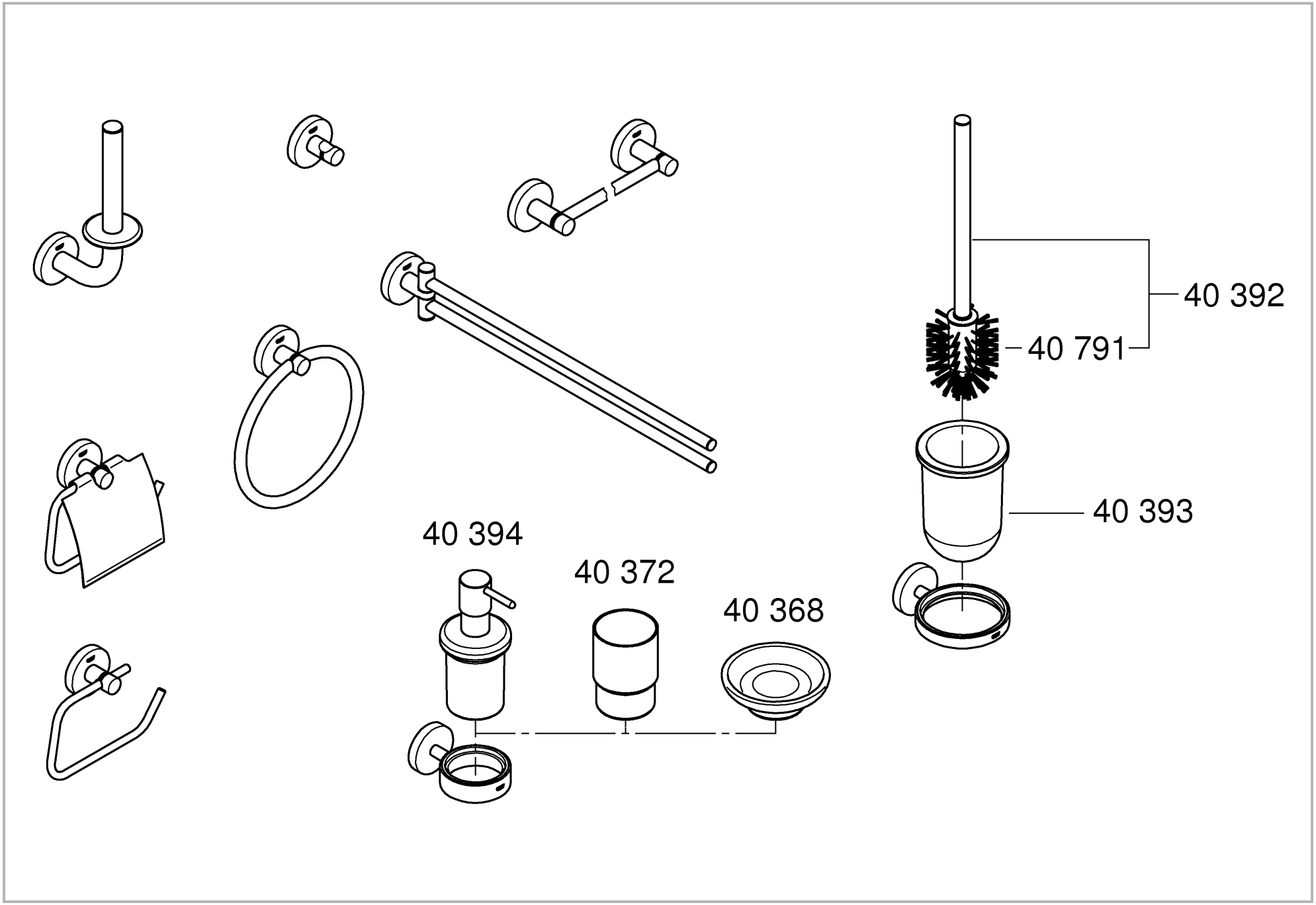

TM.by ONLINE STORE
https://tm.by
Интернет-магазин TM.by